18 24

HS FRENCH FLINT

THE GLASS CONTAINER SPECIALISTS

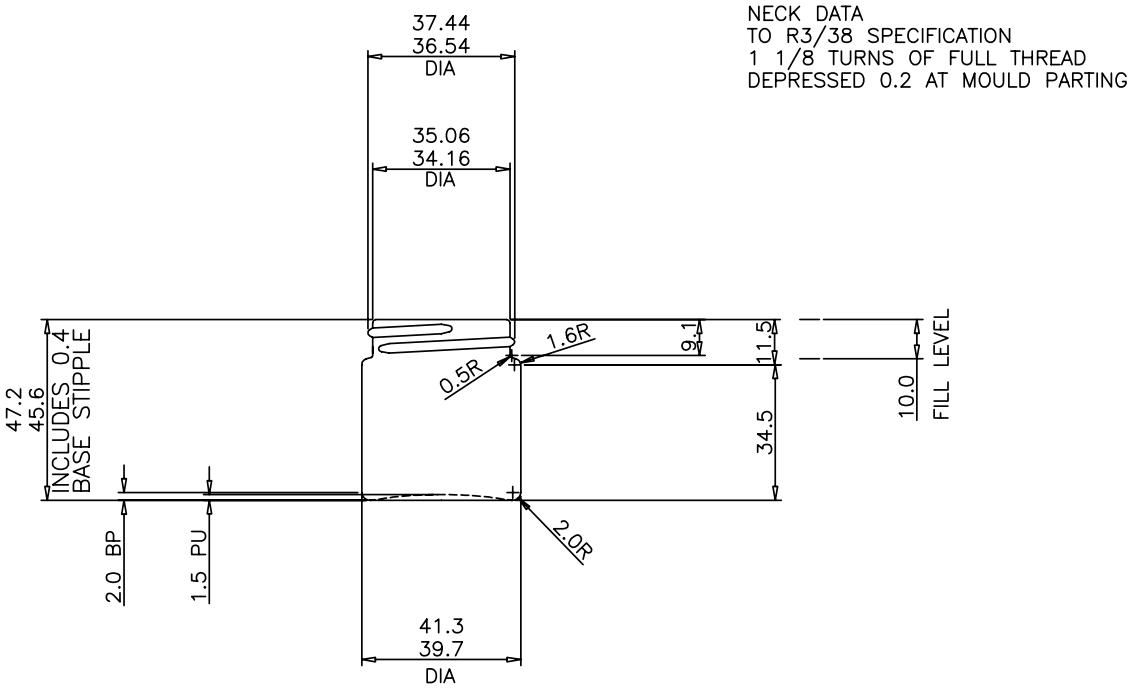

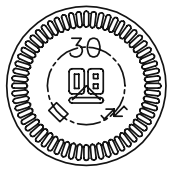

VIEW ON BASE
SHOWING EMBOSSED MARKING
STANDING AREA EMBOSSED
WITH BAR STIPPLE

30ML AMBER SQUAT GLASS JAR

Product code	AJ30
Finish	R3/38mm
Capacity	30ml
Brim-full capacity	36ml